BARAZZA
taste of design

60 cm Icon One Glass built-in oven

Multiprogram

Energy rating A

8 manual functions + rapid defrost function
maximum temperature: 270° C
capacity: 65 litres
electronic digital start/stop cooking programmer and timer
features: front controls, knobs and handle in Soft-Touch finish, Easy Clean oven interior, automatic extractable and removable door with triple and heat-reflecting glass, Soft-Close hinges, tangential cooling fan, drop down grill, 2 internal lights, side racks
equipment: 1 deep Easy Clean enamelled steel tray, 1 Easy Clean enamelled steel tray, 1 steel rack
safety devices: safety switch-off
maximum absorbed power: 2.7 kW

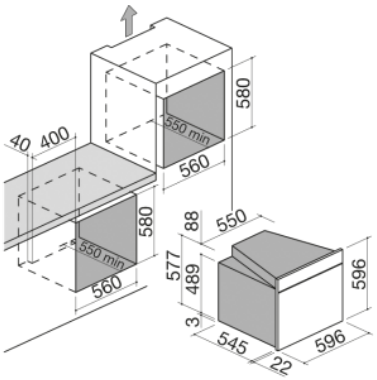

Barazza srl - via Risorgimento, 14 31025 - Sarano di S.Lucia di Piave (TV) - Italy - Tel +39 0438 62888 - Fax +39 0438 64901 - info@barazzasrl.it